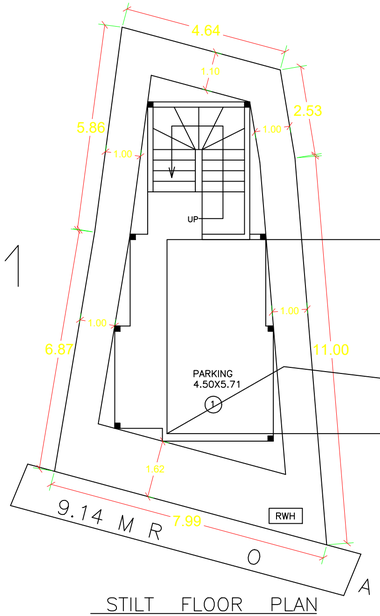

STILT FLOOR PLAN

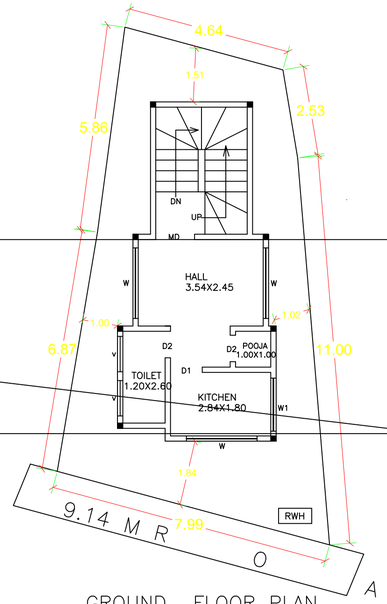

GROUND FLOOR PLAN

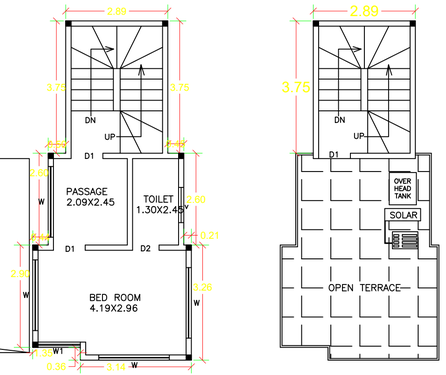

TYPICAL FIRST & SECOND FLOOR PLAN

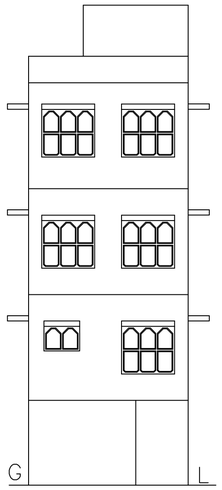

FRONT ELEVATION

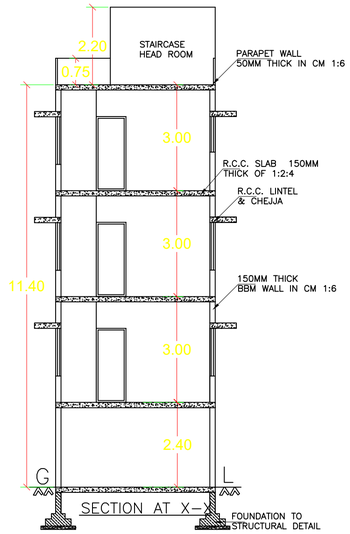

SECTION AT X-X

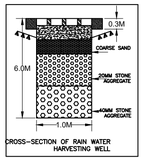

CROSS-SECTION OF RAIN WATER HARVESTING WELL

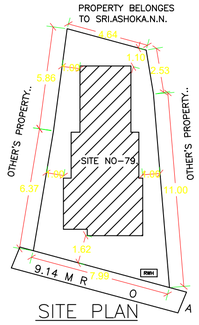

SITE PLAN

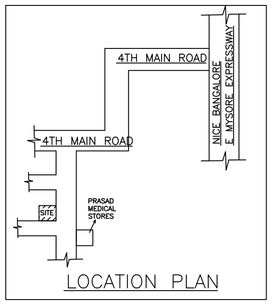

LOCATION PLAN

Block :A (1)

Floor Name	Total Built Up Area (Sq.mt.)	Deductions (Area in Sq.mt.)		Proposed FAR Area (Sq.mt.)	Total FAR Area (Sq.mt.)	Tnmt (No.)
		StairCase	Parking	Resi.		
Terrace Floor	11.28	11.28	0.00	0.00	0.00	00
Second Floor	35.01	0.00	0.00	35.01	35.01	00
First Floor	35.01	0.00	0.00	35.01	35.01	00
Ground Floor	35.01	0.00	0.00	35.01	35.01	01
Stilt Floor	35.01	0.00	27.35	0.00	7.66	00
Total:	151.32	11.28	27.35	105.03	112.69	01
Total Number of Same Blocks :	1					
Total:	151.32	11.28	27.35	105.03	112.69	01

SCHEDULE OF JOINERY:

BLOCK NAME	NAME	LENGTH	HEIGHT	NOS
A (1)	D2	0.75	2.10	04
A (1)	D1	0.90	2.10	05
A (1)	MD	1.10	2.10	01

SCHEDULE OF JOINERY:

BLOCK NAME	NAME	LENGTH	HEIGHT	NOS
A (1)	V	1.00	1.20	04
A (1)	W1	1.20	1.20	02
A (1)	W1	1.50	1.20	01
A (1)	W	2.00	1.20	11

UnitBUA Table for Block :A (1)

FLOOR	Name	UnitBUA Type	UnitBUA Area	Carpet Area	No. of Rooms	No. of Tenement
GROUND FLOOR PLAN	SPLIT GF	FLAT	105.04	61.27	4	1
TYPICAL - FIRST& SECOND FLOOR PLAN	SPLIT GF	FLAT	0.00	0.00	3	0
Total:	-	-	105.04	61.27	10	1

Block USE/SUBUSE Details

Block Name	Block Use	Block SubUse	Block Structure	Block Land Use Category
A (1)	Residential	Plotted Resi development	Bldg upto 11.5 mt. Ht.	R

Required Parking(Table 7a)

Block Name	Type	SubUse	Area (Sq.mt.)	Units		Car		
				Reqd.	Prop.	Reqd./Unit	Reqd.	Prop.
A (1)	Residential	Plotted Resi development	50 - 225	1	-	1	1	-
	Total :		-	-	-	-	1	1

Parking Check (Table 7b)

Vehicle Type	Reqd.		Achieved	
	No.	Area (Sq.mt.)	No.	Area (Sq.mt.)
Car	1	13.75	1	13.75
Total Car	1	13.75	1	13.75
TwoWheeler	-	13.75	0	0.00
Other Parking	-	-	-	13.60
Total	27.50		27.35	

FAR &Tenement Details

Block	No. of Same Bldg	Total Built Up Area (Sq.mt.)	Deductions (Area in Sq.mt.)		Proposed FAR Area (Sq.mt.)	Total FAR Area (Sq.mt.)	Tnmt (No.)
			StairCase	Parking	Resi.		
A (1)	1	151.32	11.28	27.35	105.03	112.69	01
Grand Total:	1	151.32	11.28	27.35	105.03	112.69	1.00

Approval Condition :

This Plan Sanction is issued subject to the following conditions :

1.Sanction is accorded for the Residential Building at 79 , HALAGEVADERAHALLI VILLAGE , KENGERI HOBLI, BANGALORE, Bangalore.
a).Consist of 1Stilt + 1Ground + 2 only.
2.Sanction is accorded for Residential use only. The use of the building shall not be deviated to any other use.
3.27.35 area reserved for car parking shall not be converted for any other purpose.
4.Development charges towards increasing the capacity of water supply, sanitary and power main has to be paid to BWSSB and BESCOM if any.
5.Necessary ducts for running telephone cables, cubicles at ground level for postal services & space for dumping garbage within the premises shall be provided.
6.The applicant shall INSURE all workmen involved in the construction work against any accident / untoward incidents arising during the time of construction.
7.The applicant shall not stock any building materials / debris on footpath or on roads or on drains. The debris shall be removed and transported to near by dumping yard.
8.The applicant shall maintain during construction such barricading as considered necessary to prevent dust, debris & other materials endangering the safety of people / structures etc. in & around the site.
9.The applicant shall plant at least two trees in the premises.
10.Permission shall be obtained from forest department for cutting trees before the commencement of the work.
11.License and approved plans shall be posted in a conspicuous place of the licensed premises. The building license and the copies of sanctioned plans with specifications shall be mounted on a frame and displayed and they shall be made available during inspections.
12.If any owner / builder contravenes the provisions of Building Bye-laws and rules in force, the Architect / Engineer / Supervisor will be informed by the Authority in the first instance, warned in the second instance and cancel the registration if the same is repeated for the third time.
13.Technical personnel, applicant or owner as the case may be shall strictly adhere to the duties and responsibilities specified in Schedule - IV (Bye-law No. 3.6) under sub section IV-8 (e) to (k).
14.The building shall be constructed under the supervision of a registered structural engineer.
15.On completion of foundation or footings before erection of walls on the foundation and in the case of columnar structure before erecting the columns "COMMENCEMENT CERTIFICATE" shall be obtained.
16.Drinking water supplied by BWSSB should not be used for the construction activity of the building.
17.The applicant shall ensure that the Rain Water Harvesting Structures are provided & maintained in good repair for storage of water for non potable purposes or recharge of ground water at all times having a minimum total capacity mentioned in the Bye-law 32(a).
18.If any owner / builder contravenes the provisions of Building Bye-laws and rules in force, the authority will inform the same to the concerned registered Architect / Engineers / Supervisor in the first instance, warn in the second instance and cancel the registration of the professional if the same is repeated for the third time.
19.The Builder / Contractor / Professional responsible for supervision of work shall not shall not materially and structurally deviate the construction from the sanctioned plan, without previous approval of the authority. They shall explain to the owner s about the risk involved in contravention of the provisions of the Act, Rules, Bye-laws, Zoning Regulations, Standing Orders and Policy Orders of the BBMP.
20.In case of any false information, misrepresentation of facts, or pending court cases, the plan sanction is deemed cancelled.
Special Condition as per Labour Department of Government of Karnataka vide ADDENDUM (HosadaagiHoodike) Letter No. LD/95/LET/2013, dated: 01-04-2013 :

1.Registration of
Applicant / Builder / Owner / Contractor and the construction workers working in the construction site with the "Karnataka Building and Other Construction workers Welfare Board"should be strictly adhered to

2.The Applicant / Builder / Owner / Contractor should submit the Registration of establishment and list of construction workers engaged at the time of issue of Commencement Certificate. A copy of the same shall also be submitted to the concerned local Engineer in order to inspect the establishment and ensure the registration of establishment and workers working at construction site or work place.
3.The Applicant / Builder / Owner / Contractor shall also inform the changes if any of the list of workers engaged by him.
4.At any point of time No Applicant / Builder / Owner / Contractor shall engage a construction worker in his site or work place who is not registered with the "Karnataka Building and Other Construction workers Welfare Board".

Note :

1.Accommodation shall be provided for setting up of schools for imparting education to the children o f construction workers in the labour camps / construction sites.
2.List of children of workers shall be furnished by the builder / contractor to the Labour Department which is mandatory.
3.Employment of child labour in the construction activities strictly prohibited.
4.Obtaining NOC from the Labour Department before commencing the construction work is a must.
5.BBMP will not be responsible for any dispute that may arise in respect of property in question.
6.In case if the documents submitted in respect of property in question is found to be false or fabricated, the plan sanctioned stands cancelled automatically and legal action will be initiated.

The plans are approved in accordance with the acceptance for approval by the Assistant Director of town planning (RR NAGAR) on date:07/12/2019 vide lp number:BBMP/Ad.Com./RJH/1611/19-20 subject to terms and conditions laid down along with this building plan approval.

Validity of this approval is two years from the date of issue.

Name : GURUPRASAD M V
Designation : Assistant Director Town Planning (ADTP)
Organization : BRUHAT BANGALORE MAHANAGARA PALIKE
Date : 20-Dec-2019 16: 07:18

ASSISTANT DIRECTOR OF TOWN PLANNING (RR NAGAR)

BHRUHAT BENGALURU MAHANAGARA PALIKE

SCALE : 1:100

COLOR INDEX

- PLOT BOUNDARY
- ABUTTING ROAD
- PROPOSED WORK (COVERAGE AREA)
- EXISTING (To be retained)
- EXISTING (To be demolished)

AREA STATEMENT (BBMP)	VERSION NO.: 1.0.11	
	VERSION DATE: 01/11/2018	
PROJECT DETAIL:		
Authority: BBMP	Plot Use: Residential	
Inward_No: BBMP/Ad.Com./RJH/1611/19-20	Plot SubUse: Plotted Resi development	
Application Type: Suvarna Parvangi	Land Use Zone: Residential (Main)	
Proposal Type: Building Permission	Plot/Sub Plot No.: 79	
Nature of Sanction: New	Khata No. (As per Khata Extract): 1194/73/79/ NORTHEN SIDE	
Location: Ring-III	Locality / Street of the property: HALAGEVADERAHALLI VILLAGE, KENGERI HOBLI, BANGALORE	
Building Line Specified as per Z.R: NA		
Zone: Rajarajeshwarinagar		
Ward: Ward-160		
Planning District: 301-Kengeri		
AREA DETAILS:		SQ.MT.
AREA OF PLOT (Minimum)	(A)	80.35
NET AREA OF PLOT	(A-Deductions)	80.35
COVERAGE CHECK		
Permissible Coverage area (75.00 %)		60.26
Proposed Coverage Area (43.57 %)		35.01
Achieved Net coverage area (43.57 %)		35.01
Balance coverage area left (31.43 %)		25.25
FAR CHECK		
Permissible F.A.R. as per zoning regulation 2015 (1.75)		140.61
Additional F.A.R within Ring I and II (for amalgamated plot -)		0.00
Allowable TDR Area (60% of Perm.FAR)		0.00
Premium FAR for Plot within Impact Zone (-)		0.00
Total Perm. FAR area (1.75)		140.61
Residential FAR (93.20%)		105.04
Proposed FAR Area		112.69
Achieved Net FAR Area (1.40)		112.69
Balance FAR Area (0.35)		27.92
BUILT UP AREA CHECK		
Proposed BuiltUp Area		151.32
Achieved BuiltUp Area		151.32

Approval Date : 12/07/2019 2:00:51 PM

Payment Details

Sr No.	Challan Number	Receipt Number	Amount (INR)	Payment Mode	Transaction Number	Payment Date	Remark
1	BBMP/28396/CH/19-20	BBMP/28396/CH/19-20	686.9	Online	9520712999	12/19/2019 3:20:17 PM	-

No.	Head	Amount (INR)	Remark
1	Scrutiny Fee	795	-
2	Scrutiny Fee	686.9	-

OWNER / GPA HOLDER'S SIGNATURE

OWNER'S ADDRESS WITH ID NUMBER & CONTACT NUMBER :
SREENAG H.P. #24, Gattigere Grama Extension,BEML Layout,3rd stage, Rajarajeshwari nagar, bangal
#79,Halagevaderana halli.Bar

HP/Sreenag

ARCHITECT/ENGINEER /SUPERVISOR 'S SIGNATURE
H. Narayana #10, Vinayaka Layout 3rd Stage Vijayanagar./n#10, Vinaya
3rd Stage Vijayanagar.
BCC/BL-3.6/E-2850/2006-07

PROJECT TITLE :
PLAN SHOWING THE PROPOSED RESIDENTIAL BUILDING AT SITE NO - 79, KHATHA NO - 1194/ 73 / 79 / NORTHERN SIDE ,HALAGEVADERAHALLI VILLAGE, KENGERI HOBLI, BANGALORE. WARD NO - 160.

DRAWING TITLE : 938016524-25-11-2019 12-52-06$_$SREENAG

SHEET NO : 1

UserDefinedMetric (730.00 x 530.00MM)

This is a system generated drawing as per the soft copy submitted by the Architect/ License Engineer